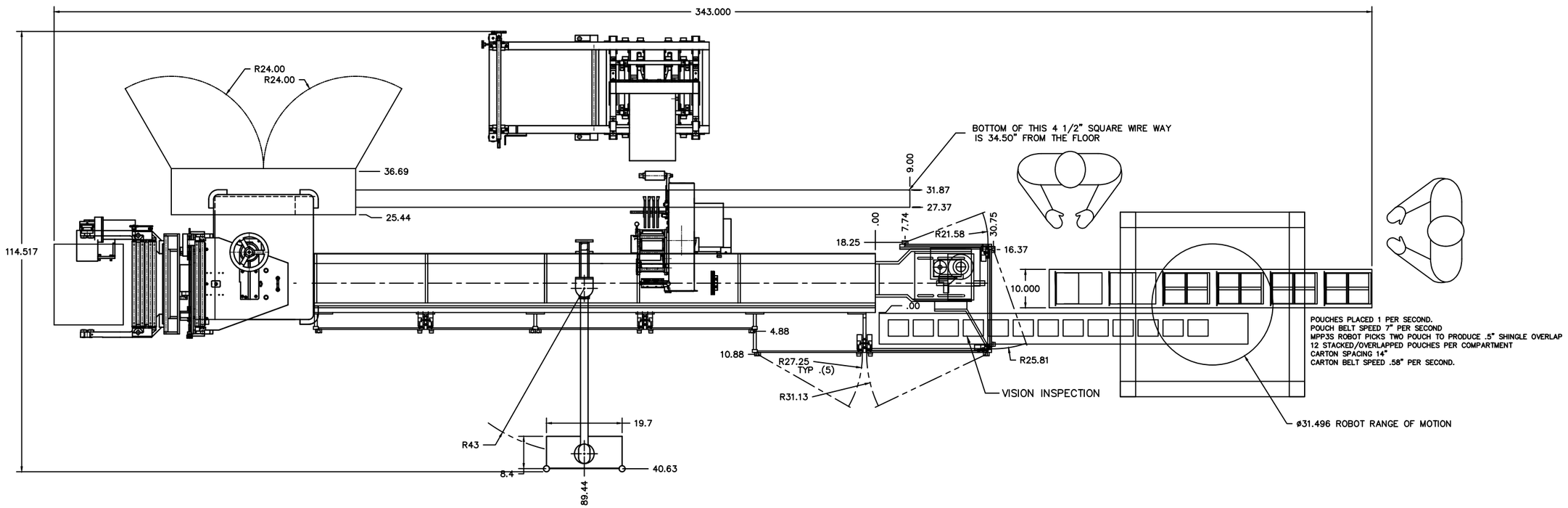

1	2	3	4	5	6	7	8	9	10	11	12
AIR JET	OPEN	CLOTH INSERT	OPEN	OPEN		OPEN	POUCH DEFLATE	POUCH DEFLATE	TOP SEAL	OPEN	PICKOFF

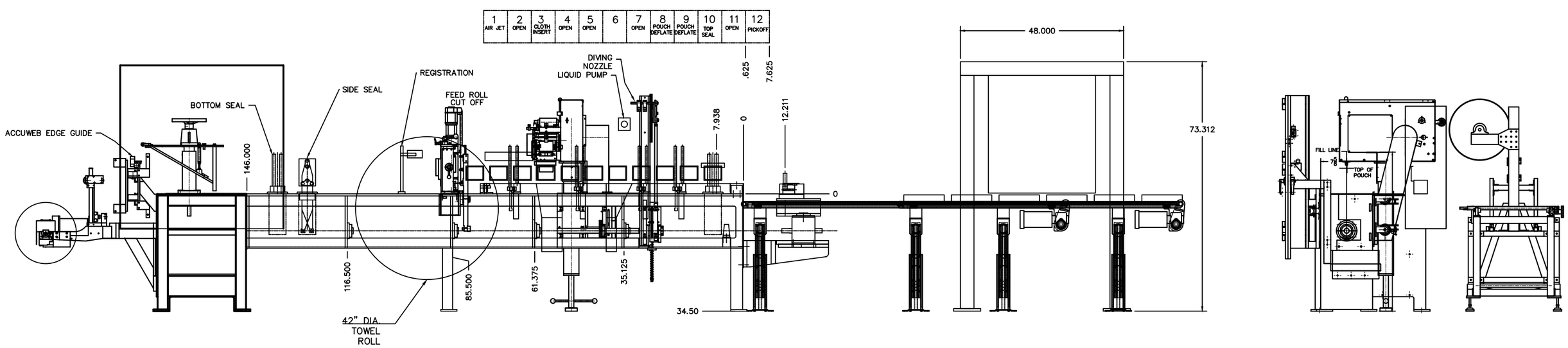

HMC PRODUCTS INC.
IM 7-12 PACKAGER ALERGAN
PRELIMINARY 10/30/2017